SCAN

Name: _____ Index No: _____/_____

2307/305
MEASUREMENT, ESTIMATING
AND COSTING
Oct./Nov. 2013
Time: 3 hours

Candidate's Signature: _____

Date: _____

THE KENYA NATIONAL EXAMINATIONS COUNCIL

DIPLOMA IN CIVIL ENGINEERING

MEASUREMENTS, ESTIMATING AND COSTING

3 hours

INSTRUCTIONS TO CANDIDATES

Write your name and index number in the spaces provided above.
Sign and write the date of the examination in the spaces provided above.
You should have the following for this examination:

Dimension papers;
Pocket calculator'
A copy of Standard Method of Measurement of Building Works and Associated Civil Works for Easter Africa (SMM)
A copy of Civil Engineering Standard Method of Measurement (CESMM).

*This paper consists of **SIX** questions in **TWO** sections; **A** and **B**.*
*Answer any **TWO** questions from each section. Questions in section **A** carry 30 marks each, while those in section **B** carry 20 marks each.*
Maximum marks for each part of a question are as shown.
*Answer **ALL** the questions in the spaces provided on this question paper.*

For Examiner's Use Only

Question	1	2	3	4	5	6	TOTAL SCORE
Candidate's Score							

This paper consists of 16 printed pages.

Candidates should check the question paper to ascertain that all the pages are printed as indicated and that no questions are missing.

SECTION A: MEASUREMENT

*Answer any **TWO** questions from this section.*

1. Take off all quantities for the 'superstructure works' shown on drawing No. 01, including the rain water goods (use SMM). (30 marks)

2. Drawing No. 02 (a) and 02 (b) show the plan, elevation and section of a culvert and headwall details. Take off all quantities for the works (use CESMM). (30 marks)

3. (a) (i) Define the term 'variation'.

   (ii) Outline the 'Ideal sequence of events' that should be followed before an Engineer's Instruction is executed.

   (7 marks)

   (b) Explain the significance of each of the following:

   (i) Retention money;

   (ii) Contingency sum.

   (8 marks)

   (c) Distinguish, defined provisional sum from undefined provisional sum as used in Civil Engineering quantities.

   (6 marks)

   (d) Describe the following types of contracts:

   (i) Bills of quantities;

   (ii) Schedule of rates;

   (iii) cost plus percentage.

   (9 marks)

SECTION B: ESTIMATING AND COSTING

*Answer any **TWO** questions from this section.*

Use the data in Appendix 'A' for price build up.

4. (a) Explain the meaning of "All-in-labour rate". (2 marks)

   (b) Briefly explain the following types of wastes as used in estimating and costing giving **five** examples of each:

   (i) Direct waste;

   (ii) Indirect waste.

   (10 marks)

(c) (i) Outline five factors an estimator should consider when visiting a site for the purpose of tendering.

(ii) Distinguish an 'estimate' from a 'Tender' and state the objectives for each. (8 marks)

5. Build up unit rate for "Engineering brick work thickness 150-250 mm, vertical straight walls" (Measured in accordance with CESMM). (20 marks)

6. Build up unit rates for each of the following:
(measured in accordance with SMM)

(a) "Sawn softwood formwork to vertical sides of column' shown in drawing No. 03; per m^3.

(13 marks)

(b) 10 mm diameter reinforcement bars, including laps, bends, tying wires, distance blocks all as necessary (per kg). (7 marks)

APPENDIX 'A'

I GENERAL INFORMATION

Skilled labour	-	Shs.100 per hour
Unskilled labour	-	Shs.50 per hour
Overheads and profit	-	25%

Cost of material is as delivered to site.
Reasonable assumption to be made for information not given.

II BRICK WORK

Cement 50kg bag	-	Sh.750.00
Sand per tonne	-	Sh.1,200.00
Bulking of sand	-	25%
Hire rate of 300 litres capacity mixer		
Inclusive of running cost	-	Sh.5,500 per day
Working hour per day	-	9 hours
Efficiency of mixer	-	85%
Density of cement	-	1442 kgm^{-3}
Density of sand	-	1600 kgm^{-3}
Brick size 215 x 102.5 x 65 mm		Sh.15 per each.

III FORM WORK

Sawn softwood	-	Sh.15,500 per m^3.
Size of column	-	350 x 25 x 300 mm long
20 litres of mould oil	-	Sh.900.00

IV REINFORCEMENT

Mild steel to Bs 4449, 10mm diameter bar, 11.5m long cost	-	Sh.520.00
1m long 10mm diameter bar weighs	-	0.62 kgs.

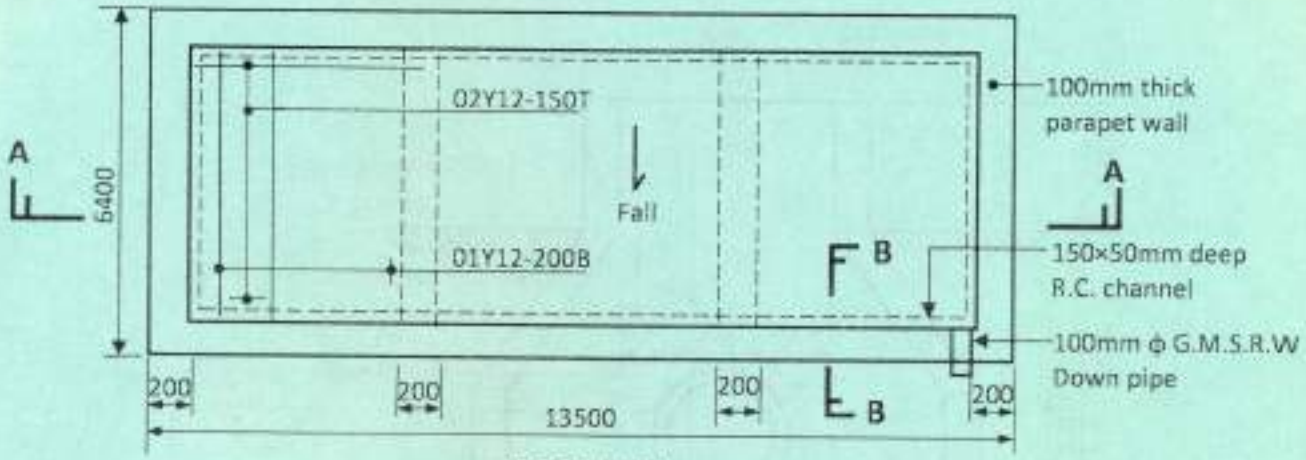

ROOF PLAN

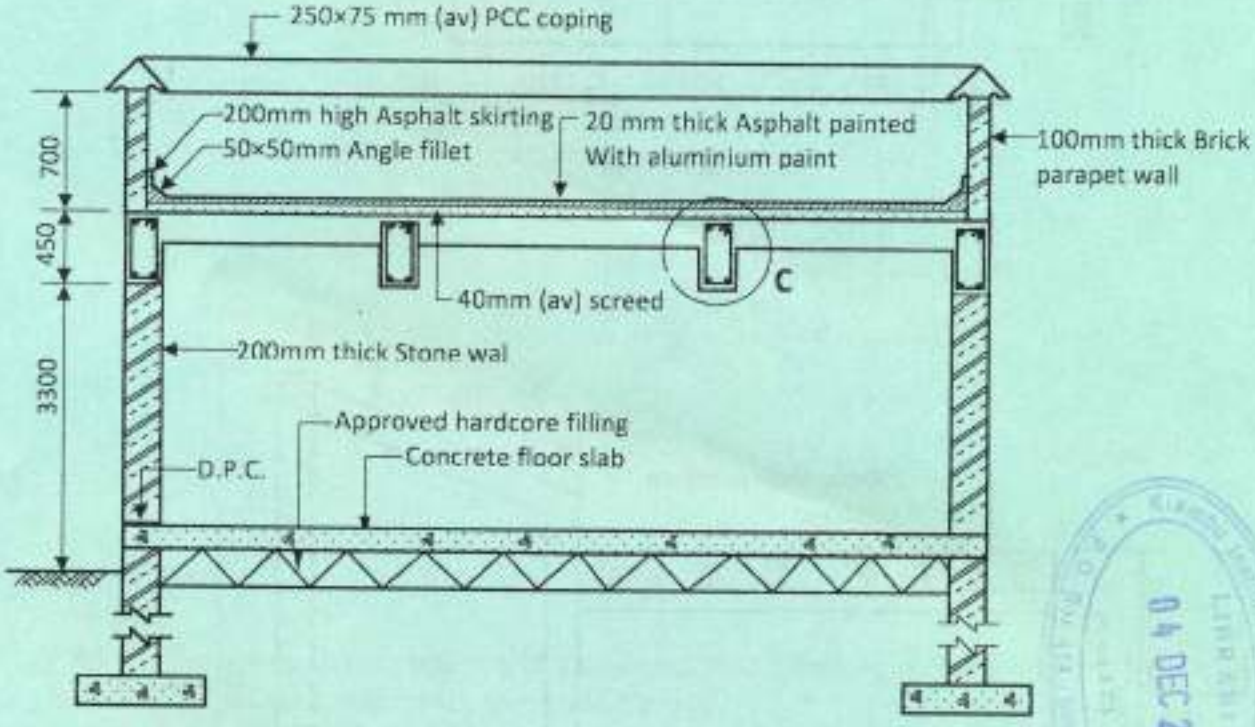

SECTION A-A

SECTION B-B

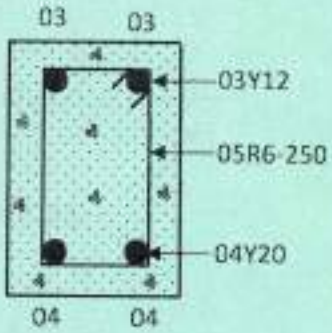

DETAIL 'C'

DRG No. 1

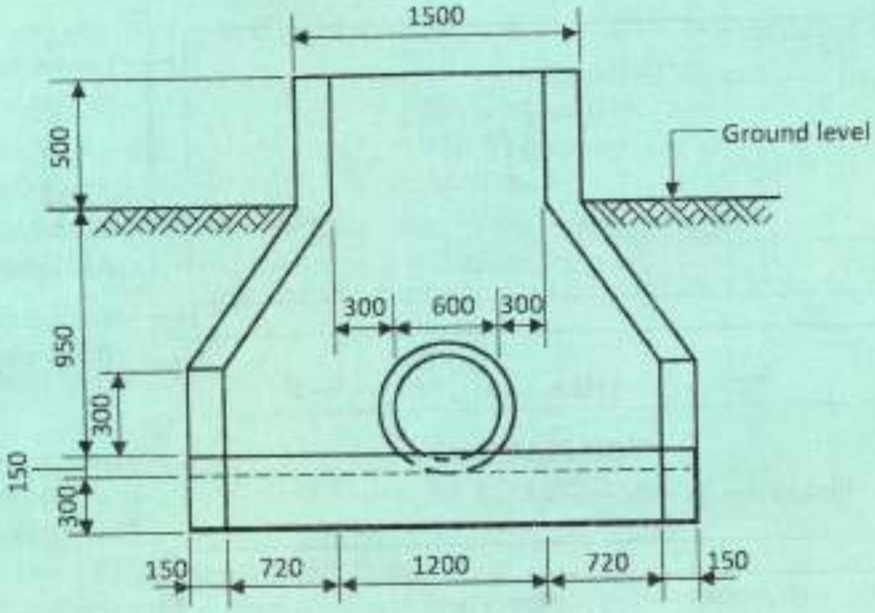

FRONT ELEVATION

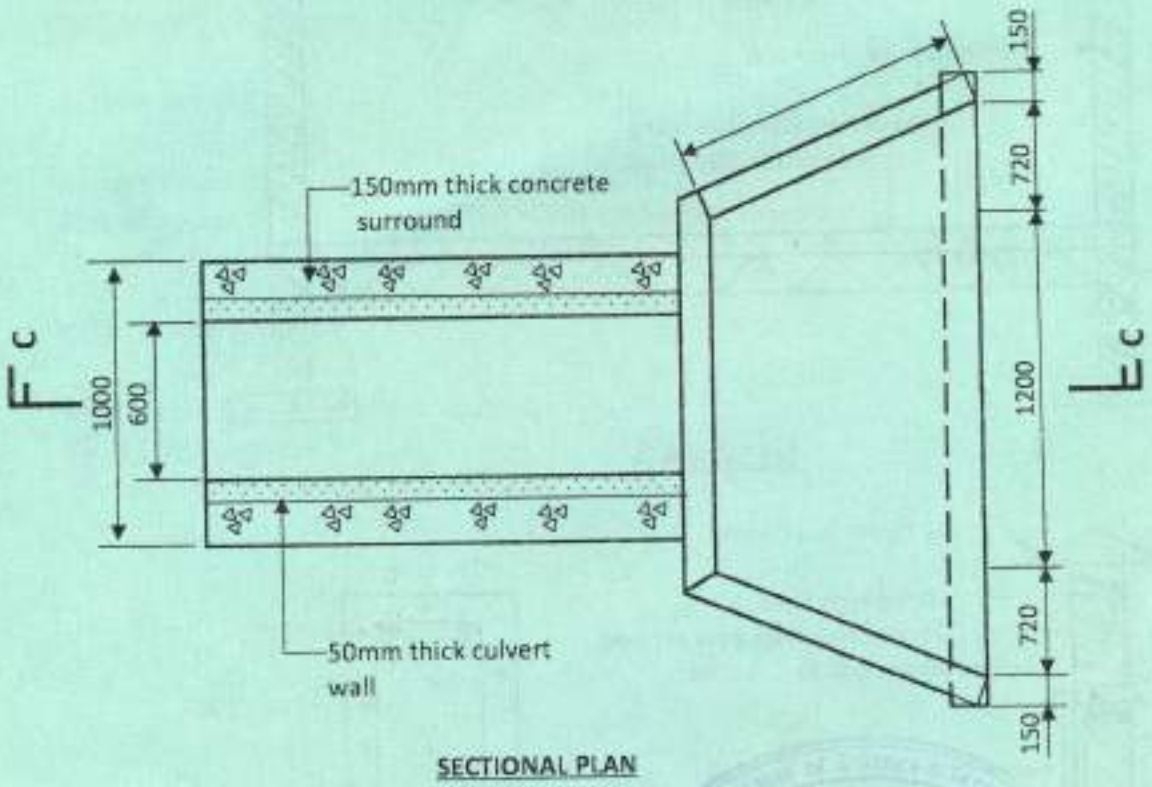

SECTIONAL PLAN

DRG No. 2(a)

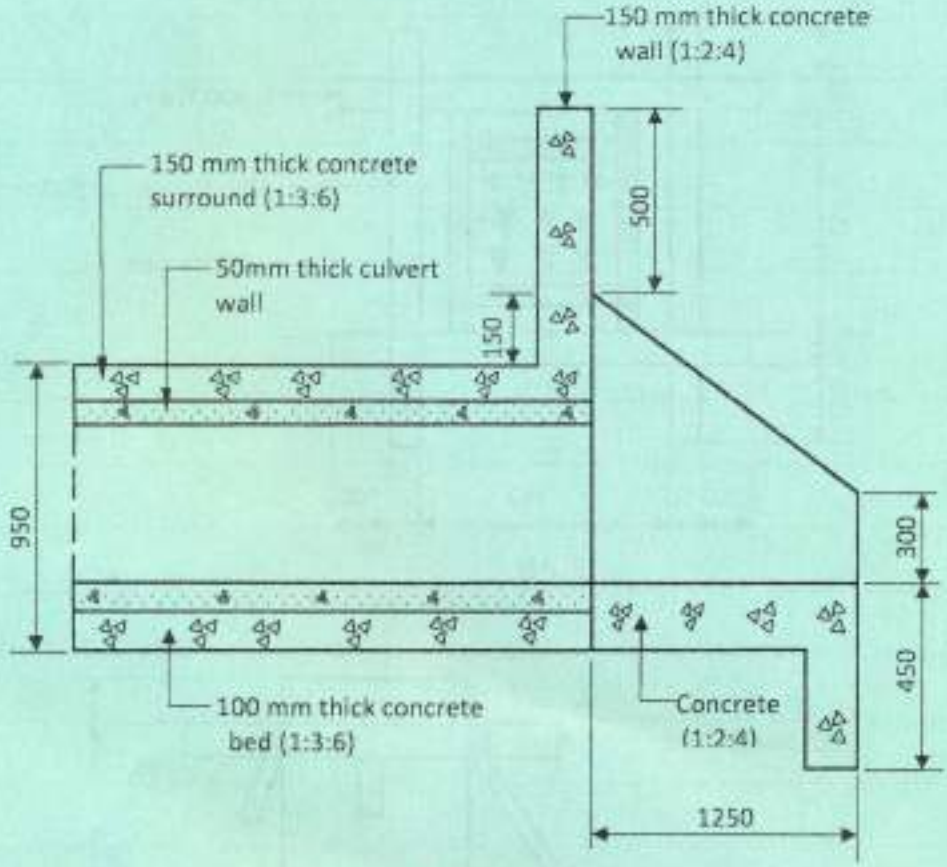

SECTIONAL C-C

DRG No. 2(b)

SPECIFICATION

1. Cutvert pipe pass under the position of a proposed road 15m long.
2. Concrete in headwall, wind wall, apron and toe wall.
3. Headwall details on both sides of culvert crossing the road identical.
4. Ignore reinforcement work.
5. Top soil coverage 150 mm deep for disposal.

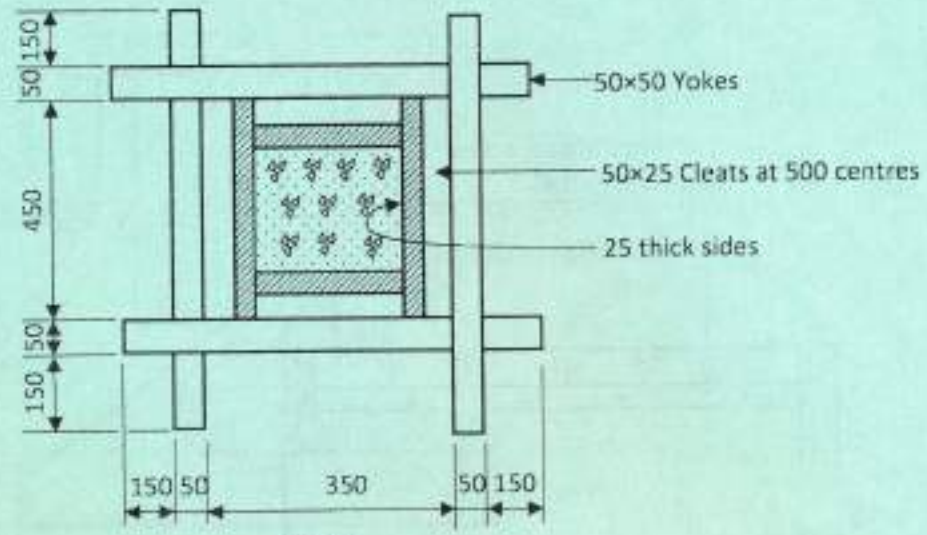

PLAN

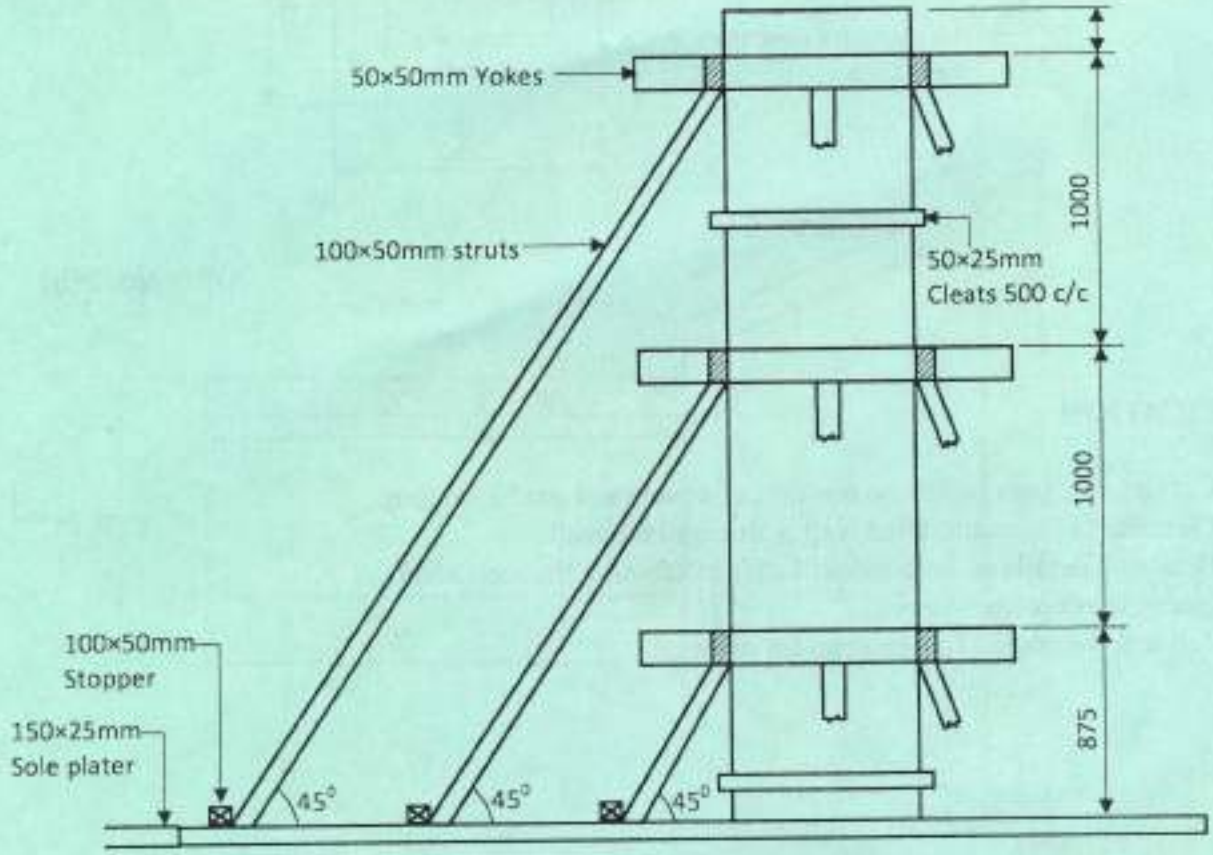

ELEVATION

DRG No. 03